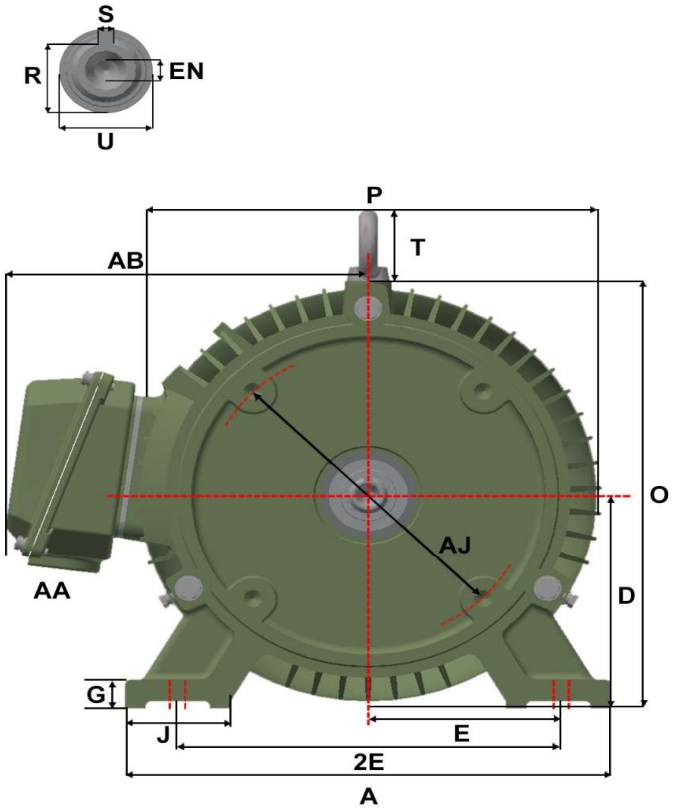

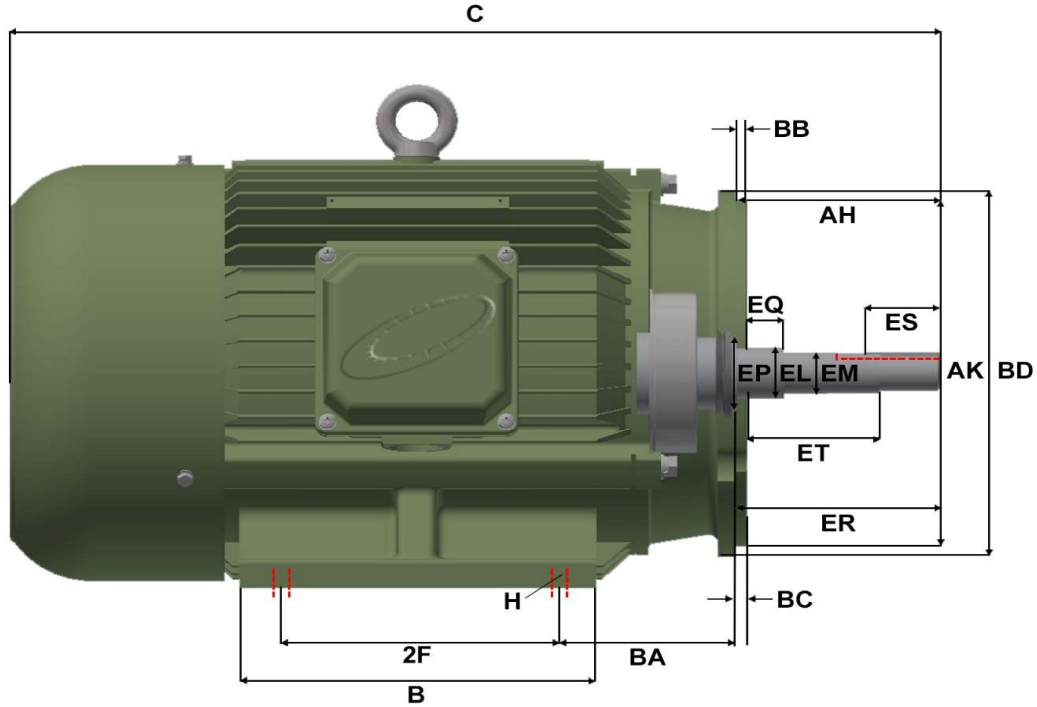

Version: 1WTI			Revised: 26-01-2023			HP	RPM	FRAME	ENCLOSURE	JMPP/JMQP-18			
Customer is responsible in determining that MEP product will fit/perform suitably in the intended application						3	1200	213JM	TEFC				
A	B	C	D	E	2E	2F		G	H	J	O	P	R
11.00	7.90	20.78	5.25	4.25	8.50	5.50		0.70	0.41	2.40	11.60	11.12	0.771-0.756
S	T	U	AA	AB	AH	AJ	AK	BA	BB	BC	BD	EL	EM
0.190-0.188	1.90	0.8745-0.8740	1.00	8.30	4.25	7.25	8.500-8.497	4.25	0.312-0.250	0.25	9.00	1.250-1.248	1.0000-0.9995
EN	EP	EQ	ER	ES	ET								
3/8-16	1.77	0.640-0.610	4.281-4.219	1.65	2.890-2.860								